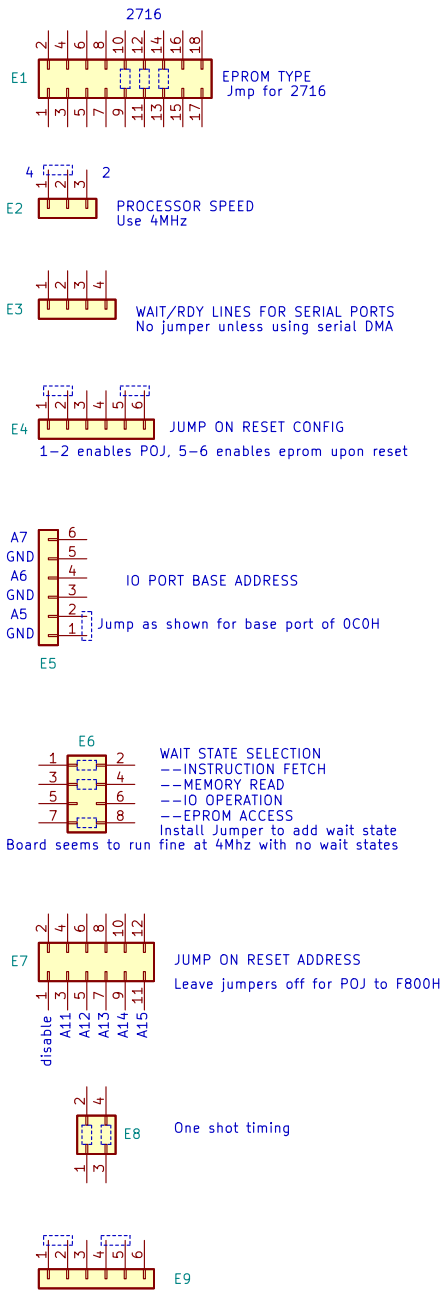

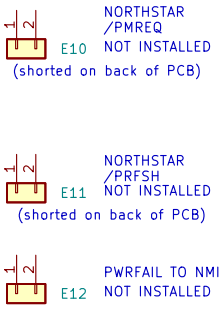

Lawrence Glaister VE7IT

Sheet: /jumpers/
File: jumpers.sch

Title: Microbyte MZ80A-I/O jumpers

Size: USLetter	Date: 2021-03-31	**Rev: -**
KiCad E.D.A. eeschema 5.1.9		Id: 8/9